Cambridge International Examinations
Cambridge International General Certificate of Secondary Education

PHYSICS **0625/22**

Paper 2 Multiple Choice (Extended) **February/March 2017**

45 minutes

Additional Materials: Multiple Choice Answer Sheet
Soft clean eraser
Soft pencil (type B or HB recommended)

READ THESE INSTRUCTIONS FIRST

Write in soft pencil.
Do not use staples, paper clips, glue or correction fluid.
Write your name, Centre number and candidate number on the Answer Sheet in the spaces provided unless this has been done for you.
DO **NOT** WRITE IN ANY BARCODES.

There are **forty** questions on this paper. Answer **all** questions. For each question there are four possible answers **A**, **B**, **C** and **D**.
Choose the **one** you consider correct and record your choice in **soft pencil** on the separate Answer Sheet.

Read the instructions on the Answer Sheet very carefully.

Each correct answer will score one mark. A mark will not be deducted for a wrong answer.
Any rough working should be done in this booklet.
Electronic calculators may be used.
Take the weight of 1.0 kg to be 10 N (acceleration of free fall = 10 m / s^2).

The syllabus is approved for use in England, Wales and Northern Ireland as a Cambridge International Level 1/Level 2 Certificate.

This document consists of **16** printed pages.

IB17 03_0625_22/4RP
© UCLES 2017

CAMBRIDGE International Examinations

www.root19.com +91 - 9969 353 391

1 The diagram shows the height of a stack of identical coins.

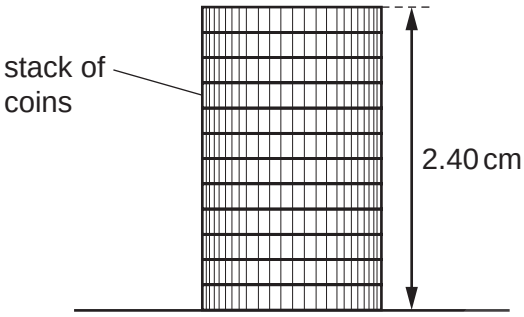

What is the thickness of one coin?

A 0.20 mm **B** 2.0 mm **C** 0.24 cm **D** 2.0 cm

2 Four balls with different masses are dropped from the heights shown.

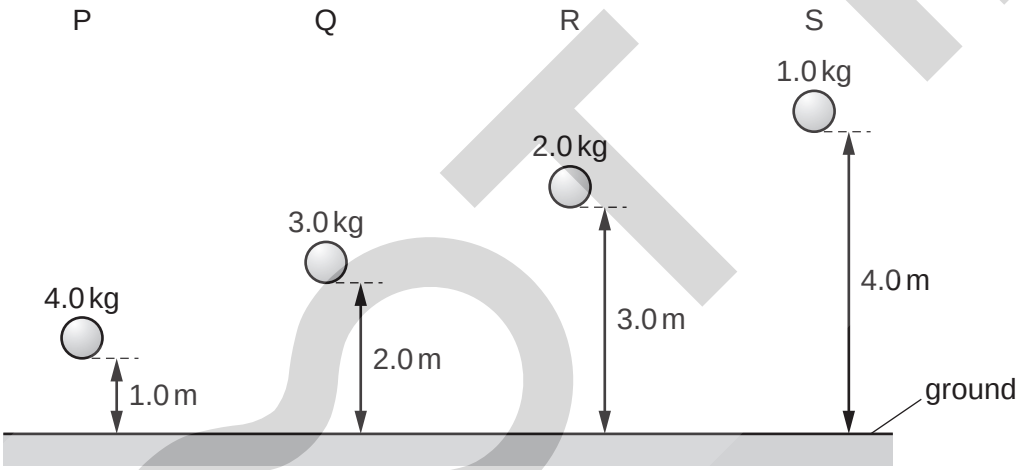

Air resistance may be ignored.

Which statement about the balls is correct?

A Ball P has the greatest acceleration.

B Balls Q and R take the same time to fall to the ground.

C The acceleration of ball R is half the acceleration of ball P.

D Ball S has the greatest average speed.

www.root19.com +91 - 9969 353 391

3 An object is travelling in a straight line. The diagram is the speed-time graph for the object.

At which labelled point is the object accelerating at a changing rate?

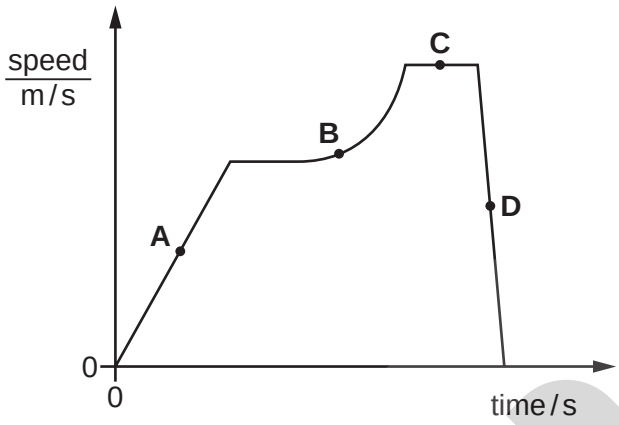

4 Which statement about the masses and weights of objects on the Earth is correct?

A A balance can only be used to compare weights, not masses.

B Heavy objects always have more mass than light ones.

C Large objects always have more mass than small ones.

D Mass is a force but weight is not.

5 An object in a space probe above the Earth weighs 3.5 N. The gravitational field strength at the height of the space probe is 7.0 N / kg.

The gravitational field strength on the Earth's surface is 10 N / kg.

What are the mass and the weight of the object on the Earth's surface?

	mass / kg	weight / N
A	0.50	3.5
B	0.50	5.0
C	2.0	3.5
D	2.0	20

© UCLES 2017
www.root19.com

+91 - 9969 353 591

6 A skydiver jumps from a stationary helicopter and reaches a steady vertical speed. She then opens her parachute.

Which statement about the falling skydiver is correct?

A As her parachute opens, her acceleration is upwards.

B As she falls at a steady speed with her parachute open, her weight is zero.

C When she accelerates, the resultant force on her is zero.

D When she falls at a steady speed, air resistance is zero.

7 A car moves in a circular path as it turns a corner on a horizontal road.

The car moves at constant speed.

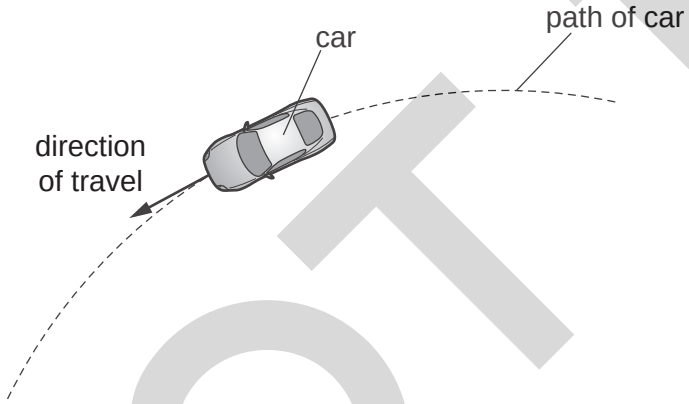

Which description of the forces acting on the car is correct?

A All the forces are balanced as the car is moving at constant speed.

B The forces are unbalanced and the resultant force acts away from the centre of the circle.

C The forces are unbalanced and the resultant force acts towards the centre of the circle.

D The forces are unbalanced and the resultant force is in the direction of travel of the car.

8 A moving body undergoes a change of momentum.

What is a unit for change of momentum?

A N m **B** N / m **C** N s **D** N / s

© UCLES 2017
www.root19.com

+91 - 9969 353 391

9 A man can either take an escalator or a lift to travel up between two floors in a hotel.

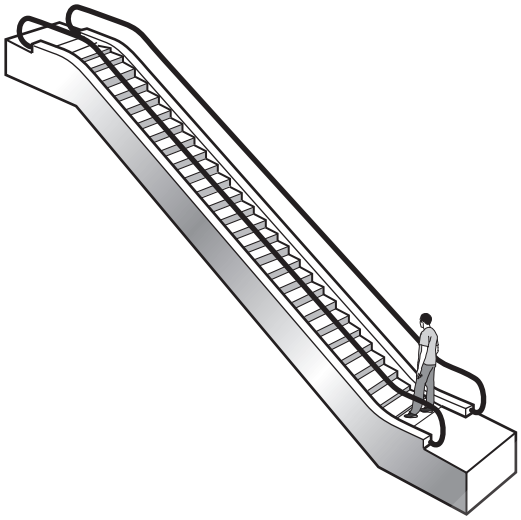

escalator

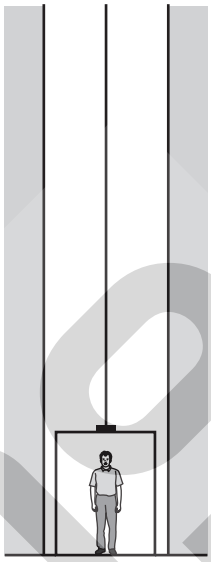

lift

The escalator takes 20 seconds to carry the man between the two floors. The useful work done against gravity is *W.* The useful power developed is *P.*

The lift takes 30 seconds to carry the same man between the same two floors.

How much useful work against gravity is done by the lift, and how much useful power is developed by the lift?

	useful work done against gravity by lift	useful power developed by lift
A	more than *W*	less than *P*
B	more than *W*	*P*
C	*W*	less than *P*
D	*W*	*P*

10 A 40 W lamp wastes 34 J of energy every second by heating its surroundings.

What is the efficiency of the lamp?

A 0.15% **B** 15% **C** 18% **D** 85%

11 A column of liquid has height *h*, mass *m* and density ρ. The gravitational field strength is *g*.

Which expression gives the pressure due to the column of liquid?

A $h\rho$ **B** $m\rho$ **C** mgh **D** ρgh

www.root19.com +91 - 9969 353 391

12 The diagrams show two mercury barometers. The right-hand diagram shows a tube of larger diameter. There is a vacuum above the mercury in both tubes.

Which labelled position on the right-hand tube shows the mercury level in the right-hand tube?

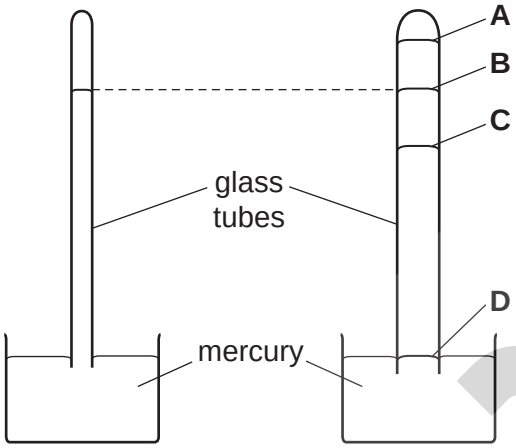

13 Very small pollen grains are suspended in water. A bright light shines from the side.

When looked at through a microscope, small specks of light are seen to be moving in a random, jerky manner.

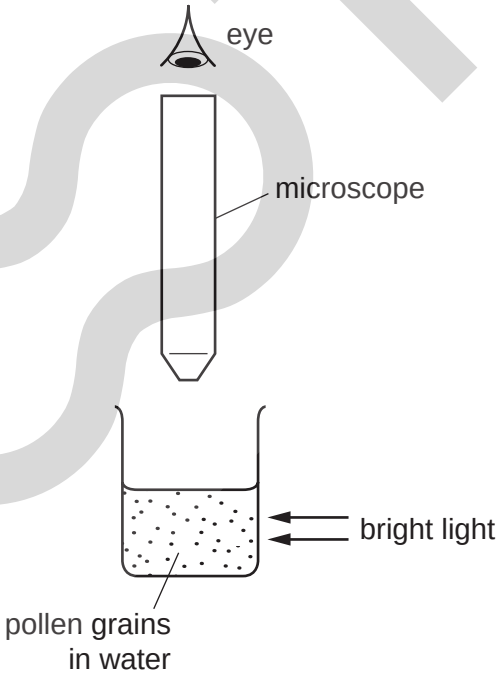

What are the moving specks of light?

A pollen grains being hit by other pollen grains

B pollen grains being hit by water molecules

C water molecules being hit by other water molecules

D water molecules being hit by pollen grains

www.root19.com +91 - 9969 353 391

14 At –39 °C, liquid mercury solidifies without a change of temperature.

Which row shows whether the mercury absorbs or releases energy and what happens to the bonds between the mercury atoms?

	energy	bonds between atoms
A	absorbed	stronger
B	absorbed	weaker
C	released	stronger
D	released	weaker

15 A model thermometer consists of a flask of coloured water and a stopper with a glass tube passing through it, as shown.

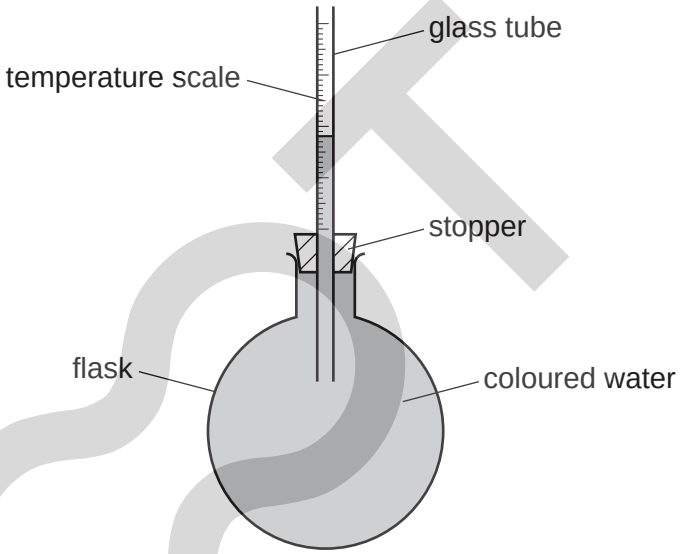

The model thermometer can be changed in one of two ways.

- The flask can be replaced with a larger one full of coloured water.
- The glass tube can be replaced with one with a larger internal diameter.

Which statement is correct?

A Only using a larger flask increases the sensitivity.

B Only using a wider tube increases the sensitivity.

C Using a larger flask increases the sensitivity and using a wider tube increases the sensitivity.

D Neither using a larger flask nor using a wider tube increases the sensitivity.

16 A metal has a specific heat capacity of 360 J / (kg °C). An object made of this metal has a mass of 2.0 kg.

What is the thermal capacity (heat capacity) of the object?

A 180 J / °C **B** 180 J / kg **C** 720 J / °C **D** 720 J / kg

17 In which type of substance are free electrons involved in the transfer of thermal energy?

A all liquids

B all solids

C metals only

D plastics only

18 Four objects, made of the same material and having the same mass, are at the same temperature. The objects have different surfaces and different surface areas.

Which object emits infra-red radiation at the greatest rate?

	surface	surface area
A	dull	large
B	dull	small
C	shiny	large
D	shiny	small

19 A person uses a surfboard to ride every 30th wave crest towards the beach. The wave crest travels at a speed of 1.6 m / s and the distance between each wave crest is 24 m.

How many wave crests does the person surf in one hour?

A 1 **B** 2 **C** 8 **D** 450

www.root19.com +91 - 9969 353 391

20 In a shallow tank, a water wave moves towards a barrier with a narrow gap.

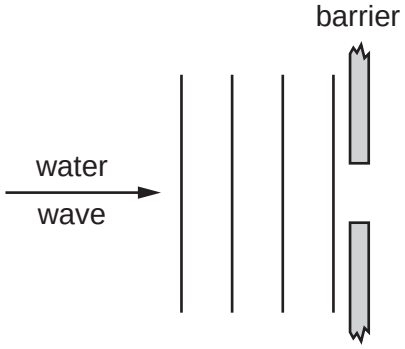

Which diagram shows the wave beyond the barrier?

A

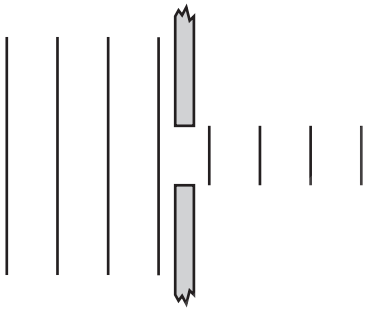

B

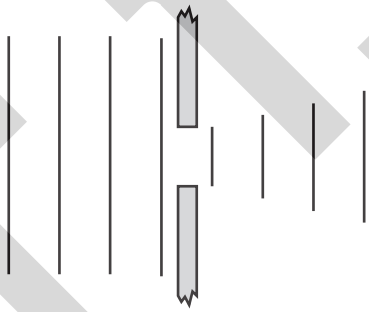

C

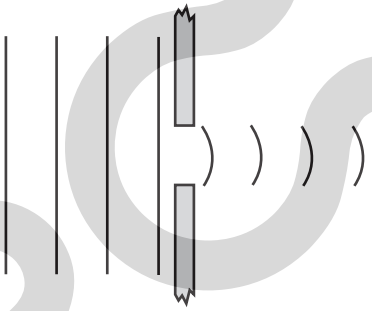

D

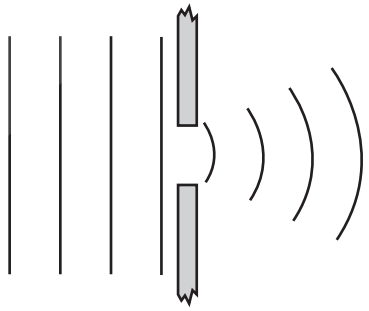

21 Light passes along an optical fibre.

What happens to the light within the fibre?

A diffraction

B dispersion

C refraction

D total internal reflection

22 The points labelled F are the principal foci of a lens. A beam of parallel light is incident on the lens.

Which diagram shows the path of the light after it passes through the lens?

A

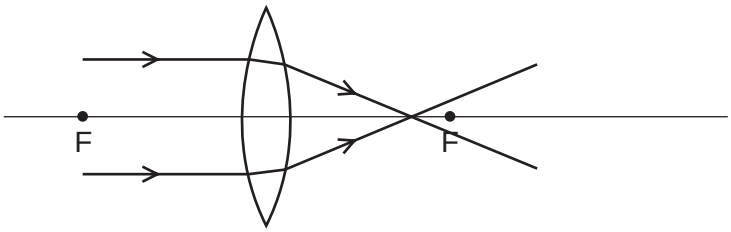

B

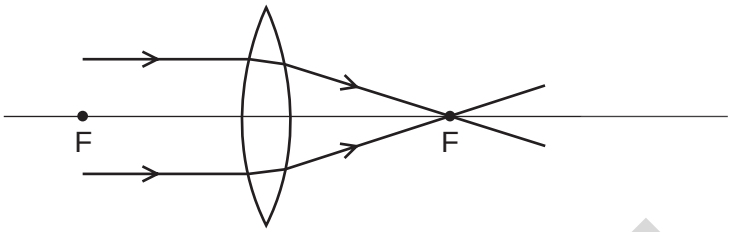

C

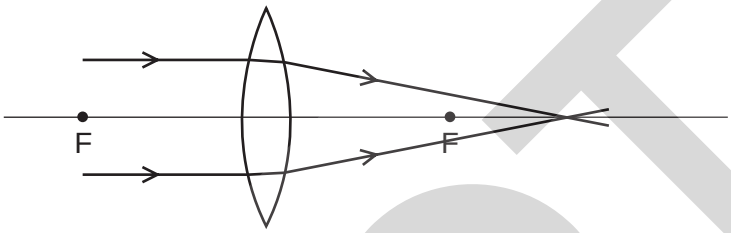

D

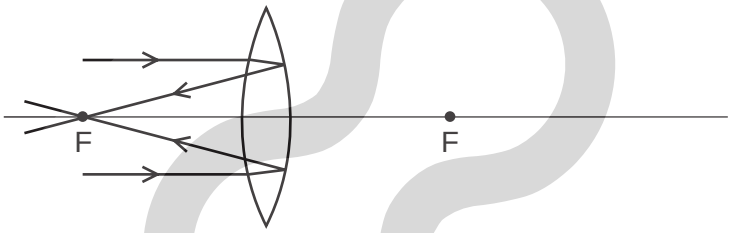

23 Which statement about sound waves is correct?

A They are able to travel through a vacuum.

B They are able to travel through solids.

C They are transverse waves.

D They travel at the same speed in all substances.

24 Which statement about ultrasound is correct?

A It is produced by a rapidly vibrating source.

B It is uncomfortable to human ears.

C Its frequency must be greater than 300 kHz.

D It travels the fastest in a vacuum.

root19

www.root19.com +91 - 9969 353 391

25 A small compass is placed close to a strong bar magnet, the same distance from each end.

Which diagram shows the direction in which the compass needle points?

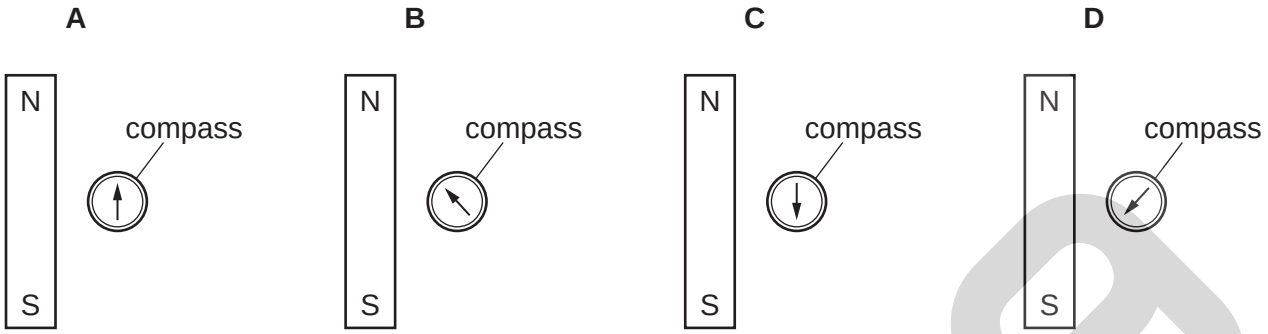

26 A bar magnet can be demagnetised by hammering it for a long time or by slowly removing it from a coil connected to a power supply.

Which row completes the descriptions of how these processes are carried out?

	hammering bar magnet for a long time with	slowly removing bar magnet from a coil connected to
A	magnet aligned E-W	a d.c. power supply
B	magnet aligned E-W	an a.c. power supply
C	magnet aligned N-S	a d.c. power supply
D	magnet aligned N-S	an a.c. power supply

27 Which particles move in a metal to cause an electric current?

A electrons

B neutrons

C nucleons

D protons

root19

28 The diagrams represent four copper wires.

Which wire has the greatest resistance?

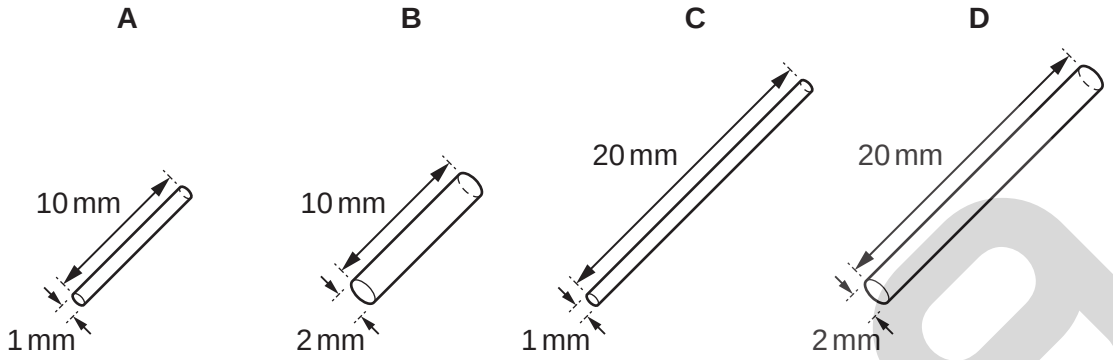

29 An air-conditioning unit, a lamp and an electric fire all receive electrical energy from the mains supply.

From which of these devices is all this energy eventually transferred to the surroundings?

	air-conditioning unit	lamp	electric fire
A	✓	✓	✓
B	✓	✗	✓
C	✗	✓	✓
D	✗	✗	✓

key

✓ = all energy transferred to surroundings

✗ = not all energy transferred to surroundings

30 Four circuits are set up.

In which circuit does the ammeter show the greatest reading?

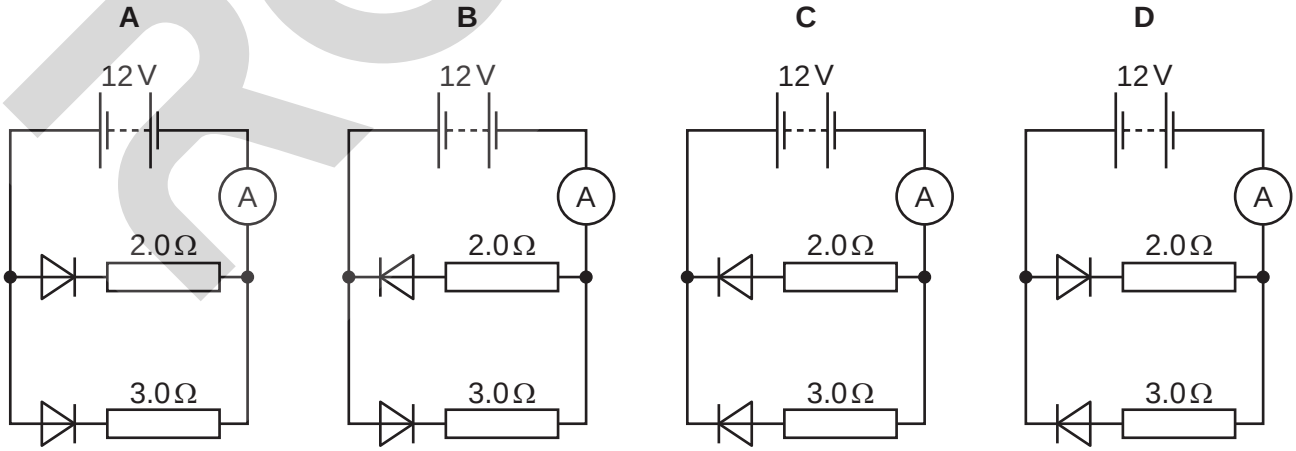

www.root19.com +91 - 9969 353 391

31 The diagram shows an electric circuit.

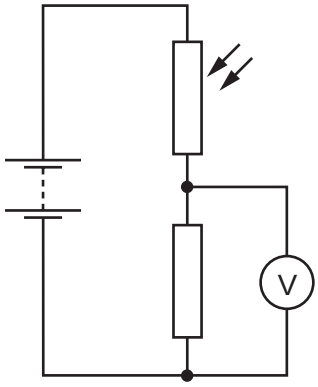

The light falling on the light-dependent resistor (LDR) increases in brightness.

What happens to the resistance of the LDR, the current in the fixed resistor and the reading on the voltmeter?

	resistance of LDR	current in fixed resistor	reading on voltmeter
A	decreases	increases	decreases
B	decreases	increases	increases
C	increases	decreases	decreases
D	increases	decreases	increases

32 The diagram shows two linked circuits to control when a bell is switched on.

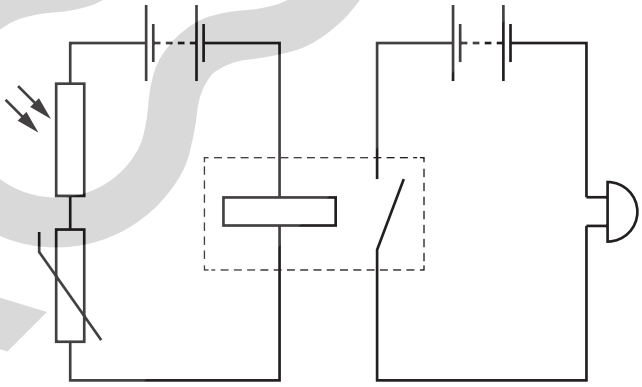

The conditions are altered and only one pair of conditions causes the bell to ring.

Which pair causes the bell to ring?

A bright light and high temperature

B bright light and low temperature

C dim light and high temperature

D dim light and low temperature

www.root19.com +91 - 9969 353 591

33 The truth table for a logic gate is shown.

input 1	input 2	output
0	0	1
0	1	0
1	0	0
1	1	0

Which type of logic gate is it?

A AND **B** NOR **C** NOT **D** OR

34 In this circuit, a component at X automatically protects the wiring from overheating if there is a fault.

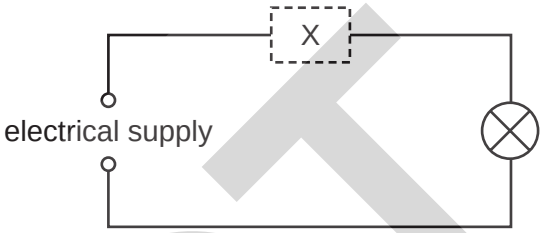

Which row indicates components that are suitable?

	circuit breaker	fuse	switch
A	✓	✓	✓
B	✓	✓	✗
C	✓	✗	✓
D	✗	✓	✗

key
✓ = suitable
✗ = not suitable

www.root19.com +91 - 9969 353 391

35 The diagram shows a simple transformer with an input of 240 V and an output of 40 V.

There are 600 turns on the primary coil.

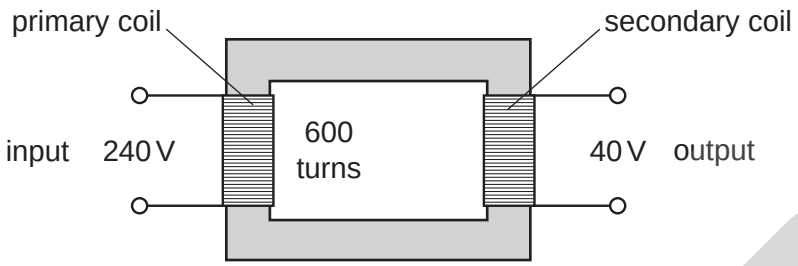

How many turns are there on the secondary coil?

A 100 **B** 320 **C** 400 **D** 3600

36 The diagram shows a current-carrying wire. The wire is at 90° to a magnetic field. The direction of the magnetic field is into the page.

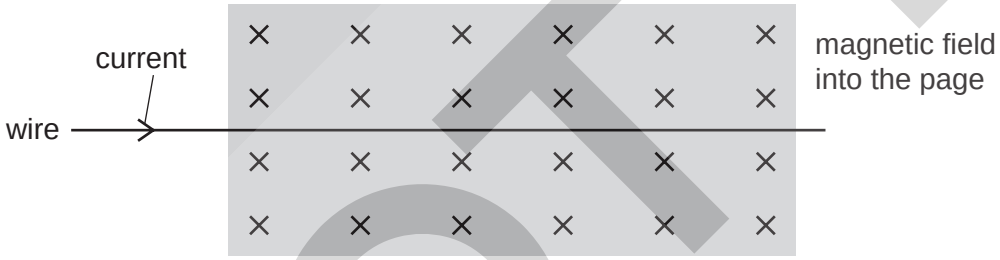

A force acts on the wire due to the current and the magnetic field.

In which direction does the force act?

A into the page

B out of the page

C towards the bottom of the diagram

D towards the top of the diagram

www.root19.com +91 - 9969 353 591

37 A radioactive substance emits radiation at a rate of 600 emissions per second. Four hours later, it emits radiation at a rate of 300 emissions per second.

What is the half-life of the substance and what is the rate of emission after a further four hours?

	half-life / hours	rate of emission after a further four hours / emissions per second
A	2	0
B	2	150
C	4	0
D	4	150

38 The nuclide notation for an isotope of silver is $^{109}_{47}Ag$.

How many nucleons are in a nucleus of this isotope?

A 47 **B** 62 **C** 109 **D** 156

39 The equation represents an isotope of radium Ra decaying to an isotope of radon Rn with the emission of particle X.

$$^{226}_{88}Ra \rightarrow ^{222}_{86}Rn + X$$

What is particle X?

A $^{0}_{-1}e$ **B** $^{1}_{1}H$ **C** $^{4}_{2}He$ **D** $^{1}_{0}n$

40 An atomic nucleus decays by one or more radioactive decay processes.

What causes the proton number to **decrease** by 1?

A α-decay followed by β-decay

B α-decay only

C β-decay followed by γ-decay

D β-decay only

Permission to reproduce items where third-party owned material protected by copyright is included has been sought and cleared where possible. Every reasonable effort has been made by the publisher (UCLES) to trace copyright holders, but if any items requiring clearance have unwittingly been included, the publisher will be pleased to make amends at the earliest possible opportunity.

To avoid the issue of disclosure of answer-related information to candidates, all copyright acknowledgements are reproduced online in the Cambridge International Examinations Copyright Acknowledgements Booklet. This is produced for each series of examinations and is freely available to download at www.cie.org.uk after the live examination series.

Cambridge International Examinations is part of the Cambridge Assessment Group. Cambridge Assessment is the brand name of University of Cambridge Local Examinations Syndicate (UCLES), which is itself a department of the University of Cambridge.

www.root19.com +91 - 9969 353 391